# ION F18-IOT-RT-L Series

## Lithium-ion Battery Online Double Conversion UPS

1kVA/1.5kVA/2kVA/3kVA

# User Guide

**info@ionups.com.au**
www.ionups.com.au
P: 1300 700 805

**Service and support:**

Call your local service representative

Scan to Download ION UPS IoT

# SAFETY INSTRUCTIONS

**SAVE THESE INSTRUCTIONS. This manual contains important instructions that should be followed during installation and maintenance of the UPS and batteries**.

UPS RT models are considered acceptable for use in the ambient of 0 ~ 40°C;

**Certification standards**

- Safety: EN IEC 62040-1.
- EMC: IEC/EN 62040-2.
- Performance: IEC/EN 62040-3.
- ISO 9001:2015.
- ISO 14001:2015.

**Special symbols**



**RISK OF ELECTRIC SHOCK** - Observe the warning associated with the risk of electric shock symbol.



Important instructions that must always be followed.



This symbol indicates that you should not discard the UPS or the UPS batteries in the trash. This product contains sealed, Lithium-Ion batteries and must be disposed of properly. For more information, contact your local recycling/reuse or hazardous waste center.



EU separate collection mark for waste electrical and electronic equipment (WEEE). Indicates that the item must not be disposed of to the 'normal' household waste but be separately collected and recycled.



Information, advice, help.



Refer to the user manual.

**Safety of persons**

- Dangerous voltage levels are present within the system. It should be opened exclusively by qualified service personnel.
- The system must be properly grounded.
- The battery supplied with the system contains small amounts of toxic materials. To avoid accidents, the directives listed below must be observed:
  - Servicing of batteries should be performed or supervised by personnel knowledgeable about batteries and the required precautions.

- Risk of explosion if battery is replaced by an incorrect type. When replacing batteries, replace with the same type and number of batteries or battery packs. Instructions shall carry sufficient information to enable the replacement of the battery with a suitable recommended type.
- **CAUTION:** Do not dispose of batteries in a fire. The batteries may explode. Dispose of used batteries according to the instructions.
- Do not open or mutilate batteries. Released electrolyte is harmful to the skin and eyes. It may be toxic.
- **CAUTION** – A battery can present a risk of electrical shock and high short circuit current. The following precautions should be observed when working on batteries:
  - Remove watches, rings, or other metal objects.
  - Use tools with insulated handles.
  - Wear rubber gloves and boots.
  - Do not lay tools or metal parts on top of batteries.
  - Disconnect charging source prior to connecting or disconnecting battery terminals.
  - Determine if battery is inadvertently grounded. If inadvertently grounded, remove source from ground. Contact with any part of a grounded battery can result in electrical shock. The likelihood of such shock can be reduced if such grounds are removed during installation and maintenance.
  - Failed batteries can reach temperatures that exceed the burn thresholds for touchable surfaces

**Product safety**

- The UPS connection instructions and operation described in the manual must be followed in the indicated order.
- UPS enclosure IP rating IP20.
- The upstream circuit breaker for Normal AC/Bypass AC must be easily accessible.
- for PERMANENTLY CONNECTED EQUIPMENT, a readily accessible disconnect device shall be incorporated external to the equipment
- for PLUGGABLE EQUIPMENT, the socket-outlet shall be installed near the equipment and shall be easily accessible
- Check that the indications on the rating plate correspond to your AC powered system and to the actual electrical consumption of all the equipment to be connected to the system.
- Never install the system near liquids or in an excessively damp environment.
- Never let a foreign body penetrate inside the system.
- Never block the ventilation grates of the system.

- Never expose the system to direct sunlight or source of heat.
- If the system must be stored prior to installation, storage must be in a dry place.
- The admissible storage temperature range is -25°C to +55°C without batteries, 0°C to +40°C with batteries, suggest to storage the battery below 25°C.
- This UPS can be used in TN/IT/TT power system

**Special precautions**

- The unit is heavy: wear safety shoes and use vacuum lifter preferentially for handling operations.
- All handling operations will require at least two people (unpacking, lifting, installation in rack system).
- Before and after the installation, if the UPS remains de-energized for a long period, the UPS must be energized for a period of 24 hours, at least once every 6 months (for a normal storage temperature less than 25°C). This charges the battery, thus avoiding possible irreversible damage.
- During the replacement of the Battery Module, it is imperative to use the same type and number of elements as the original Battery Module provided with the UPS to maintain an identical level of performance and safety.

This is a category C2 UPS product. In a residential environment, this product may cause radio interference, in which case the user may be required to take additional measures.

# Contents


1 Introduction ..... 1
1.1 Electronic equipment protection ..... 1
1.2 Environmental protection ..... 2
2 Product Overview ..... 3
2.1 Weight and Dimension ..... 3
2.2 Rear panels ..... 4
3 Installation ..... 6
3.1 Inspecting the equipment ..... 6
3.2 Checking the accessory kit ..... 6
3.3 Install the Unit ..... 7
3.4 Connecting the EBM(s) ..... 9
4 Operation ..... 10
4.1 LCD panel ..... 10
4.2 LCD description ..... 11
4.3 Display functions ..... 13
4.4 User settings ..... 14
4.5 Starting the UPS with utility ..... 15
4.6 Starting the UPS on Battery ..... 16
4.7 UPS Shutdown ..... 16
5 Communication ..... 17
5.1 RS232 and USB ..... 17
5.2 UPS remote control functions ..... 17
5.3 IoT ..... 18
5.4 Modbus TCP ..... 19
5.5 Intelligent Card (Optional) ..... 19
5.6 UPS Management Software ..... 20
6 UPS maintenance ..... 22
6.1 Equipment care ..... 22
6.2 Transporting the UPS ..... 22
6.3 Storing the equipment ..... 22
6.4 Replacing batteries ..... 22
6.5 Recycle ..... 24
7 Troubleshooting ..... 25
8 Specifications ..... 27
8.1 UPS Block Diagram ..... 27
8.2 UPS Specification ..... 27

# 1 Introduction

Thank you for selecting Innova Unity Li-ion IoT UPS to protect your electrical equipment.
We recommend that you take the time to read this manual to take full advantage of the many features of the UPS (Uninterruptible Power System).

Before installing the UPS, please read the booklet presenting the safety instructions. Then follow the indications in this manual.

## 1.1 Electronic equipment protection

The UPS protects your sensitive electronic equipment from the most common power problems, including power failures, power sags, power surges, brownouts, line noise, high voltage spikes, frequency variations, switching transients, and harmonic distortion.

**Special characteristic:**

- *Double converter with pure sine waveform output*
- *Full digital control*
- *Higher power density, and output PF = 1*
- *Wider input voltage range: 110Vac~300Vac*
- *Higher efficiency: Up to 91%-94% for 1-3K*
- *Input THDI<5.5%*
- *EBM quantity auto detection*
- *Communication ports: RPO, Dry in, Dry out, intelligent slot, USB, RS232*
- *IoT: Ethernet(default) and Wireless (Optional)*
- *Dot-matrix LCD, it supports Multi-Language*
- *ECO Mode*
- *Start-able without battery.*

## 1.2 Environmental protection

Products are developed according to an eco-design approach.

**Substances**

This product does not contain CFCs, HCFCs or asbestos.

**Packing**

To improve waste treatment and facilitate recycling, separate the various packing components.

- The cardboard we use comprises over 50% of recycled cardboard.
- Sacks and bags are made of polyethylene. 

- Packing materials are recyclable and bear the appropriate identification symbol.

Follow all local regulations for the disposal of packing materials.

**Product**

The product is mainly made up of recyclable materials.

Dismantling and disassembly must take place in compliance with all local regulations concerning waste. At the end of its service life, the product must be transported to recycling centers, re-use and treatment facilities for waste electrical and electronic equipment (WEEE).

**Battery**

The product contains lithium-ion (LFP) batteries that must be processed according to applicable local regulations concerning batteries.

The battery may be removed to comply with regulations and in view of correct disposal.

# 2 Product Overview

## 2.1 Weight and Dimension

The weights in this table is reference only, please see the labels on the carton for details.

**RT models**

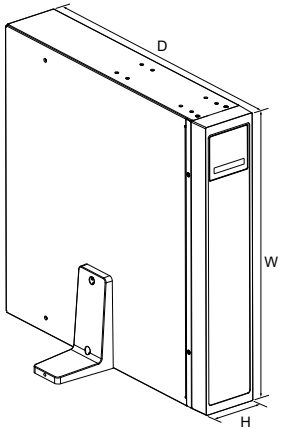


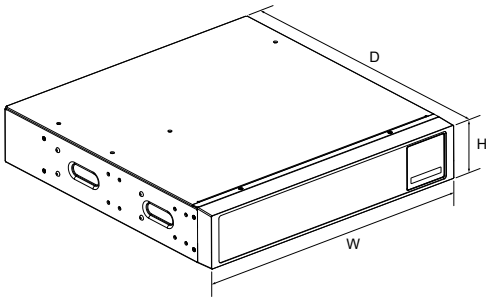


| Description | Net Weights (kg) | Dimensions: D x W x H (mm) |
|---|---|---|
| RT 1K | 14.95 | 445*438*85.5 |
| RT 1.5K | 15.2 | 445*438*85.5 |
| RT 2K | 21.1 | 600*438*85.5 |
| RT 3K | 21.45 | 600*438*85.5 |
| RT 48V EBM | 12.0 | 445*438*43 |
| RT 76.8V EBM | 17.4 | 600*438*43 |

## 2.2 Rear panels

**RT 1K/1.5K**

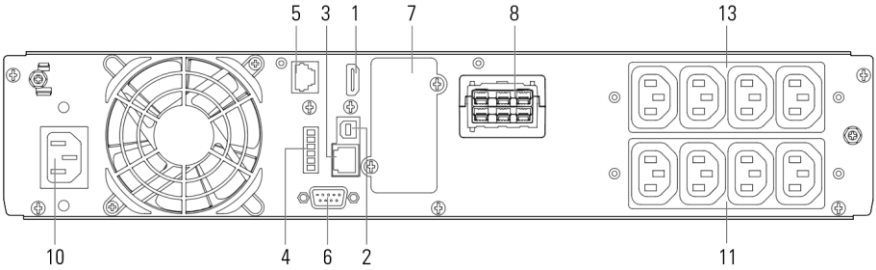


**RT 2K**

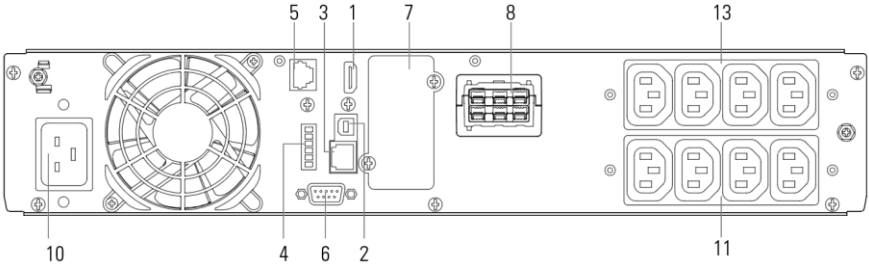


**RT 3K**

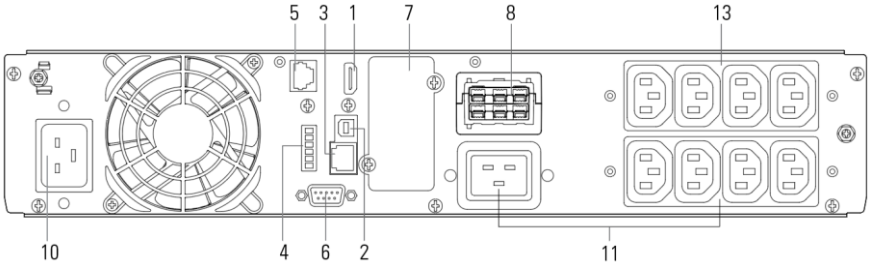

## RT 48V & 76.8V EBM




| | | | | | |
|---|---|---|---|---|---|
| 1 | WLAN(HDMI) | 2 | USB | 3 | Ethernet (RJ45) |
| 4 | RPO/Dry in/Dry out | 5 | EBM auto detection | 6 | RS232 |
| 7 | Slot Card Box | 8 | EBM Connector | 9 | Input Breaker(optional) |
| 10 | Input Socket/<br>Input Terminal | 11 | Output Socket/<br>Output Terminal | 12 | Output Fuse (optional) |
| 13 | Programmable<br>Output Socket | | | | |

# 3 Installation

## 3.1 Inspecting the equipment

If any equipment has been damaged during shipment, keep the shipping cartons and packing materials for the carrier or place of purchase and file a claim for shipping damage. If you discover damage after acceptance, file a claim for concealed damage.

To file a claim for shipping damage or concealed damage:

1. File with the carrier within 15 days of receipt of the equipment;
2. Send a copy of the damage claim within 15 days to your service representative.

## 3.2 Checking the accessory kit

**RT model**

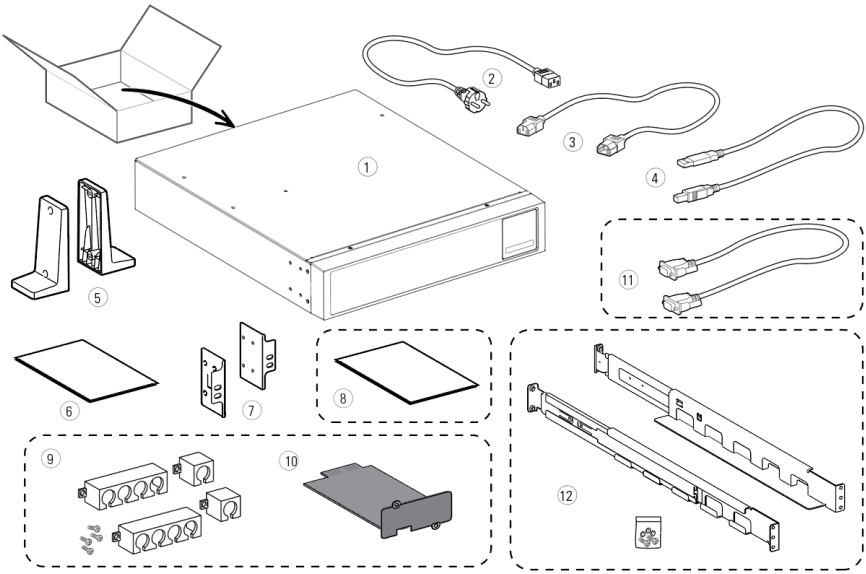


| | | | | | |
|---|---|---|---|---|---|
| 1 | UPS | 2 | Input cable | 3 | Output cables |
| 4 | USB cable | 5 | Tower stands | 6 | User manual(English) |
| 7 | Rack ears | 8 | User manual (Multi-Language) (optional) | | |
| 9 | Cable lockers (optional) | 10 | Slot card (optional) | 11 | RS232 cable(optional) |
| 12 | Rail Kit (optional) | | | | |

### 3.3 Install the Unit

Always keep 200 mm of free space behind the UPS rear panel.

Check that the indications on the name plate located on the top cover of the UPS meets to the AC-power source and the true electrical consumption of the total load.

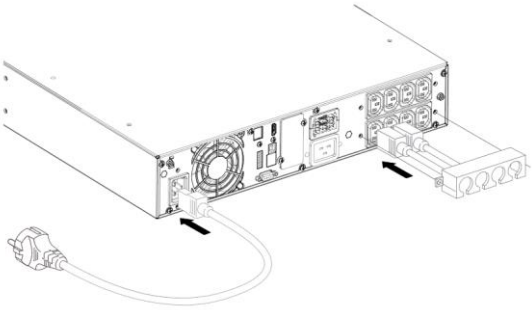

1. Connect the UPS input socket to the AC-power source using the cable of the protected equipment.
2. Connect the loads to the UPS using the cables.

Note: The UPS charges the battery as soon as it is connected to the AC-power source, even if button is not pressed.
Once the UPS is connected to the AC-power source, 8 hours of charging are required before the battery can supply the rated backup time.

When the cables connected to terminal block, the inner copper wire must not be exposed to avoid the risk of electric shock.

- **Rack installation**

Follow steps 1 to 4 for module mounting on the rails.

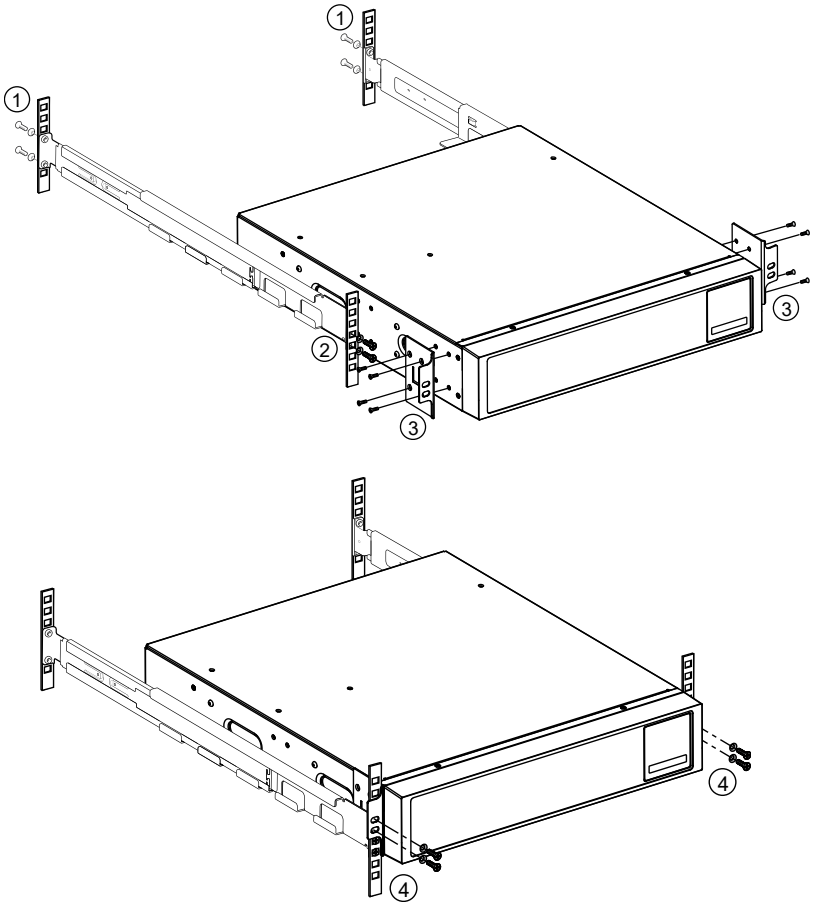

- **Tower installation**

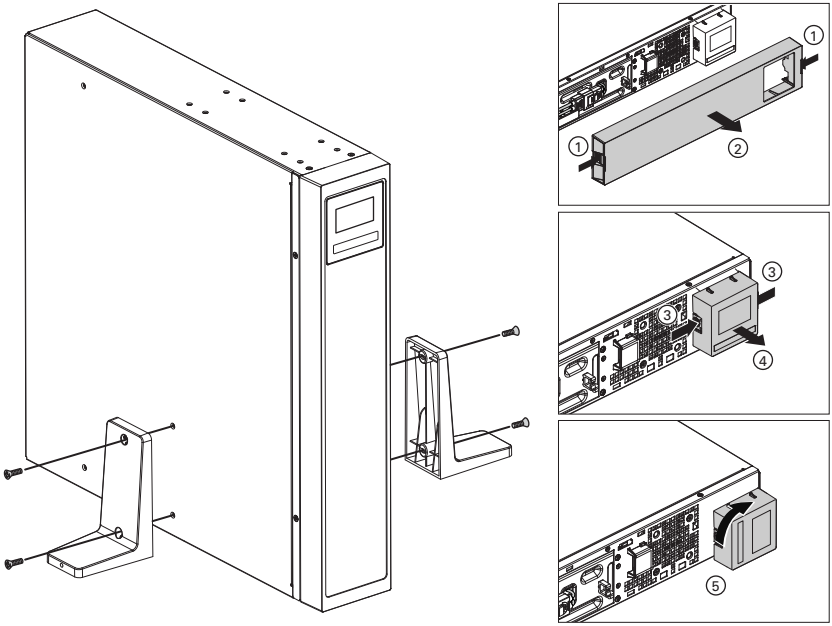


## 3.4 Connecting the EBM(s)

A small amount of arcing may occur when connecting an EBM to the UPS. This is normal and will not harm personnel.

Up to 6 EBMs can be connected to the UPS.

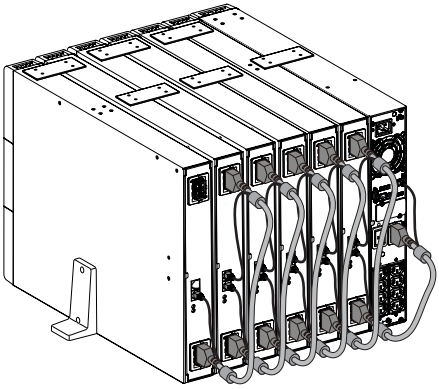

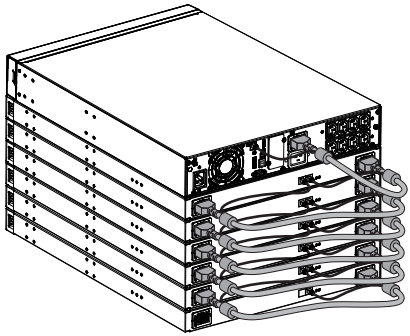

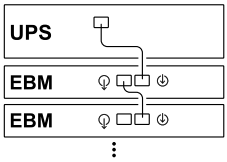

# 4 Operation

## 4.1 LCD panel

The UPS provides useful information about the UPS itself, load status, events, measurements and settings .

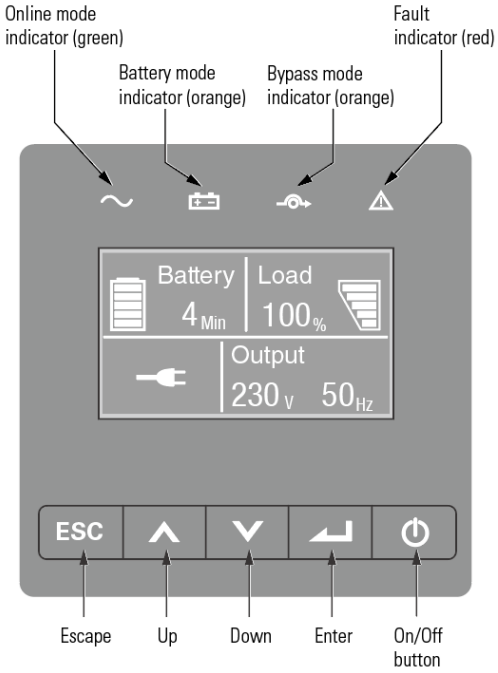


The following table shows the indicator status and description:

| Indicator | Status | Description |
|---|---|---|
| Green | On | The UPS is operating normally on Online or on High Efficiency mode. |
| Yellow | On | The UPS is on Battery mode. |
| Yellow | On | The UPS is on Bypass mode. |
| Red | On | The UPS has an active alarm or fault. See Chapter 7 troubleshooting for additional information. |

The following table shows the indicator status and description:

| The button | Function | Illustration |
|---|---|---|
|  | Power on | Press the Button for >100ms & < 1s can power on the UPS without utility input at the condition of battery connected |
| | Turn on | When the Unity is powered on, press the button for >1s can turn on the UPS |
| | Turn off | Press the button > 3s can turn off the UPS |
|  | Scroll up | Press to Scroll up the menu option |
|  | Scroll down | Press to Scroll down the menu option |
|  | Enter menu | Select/Confirm the current selection |
|  | Exit the present menu | Press to exit present menu to Main menu or the higher-level menu without changing a setting |
| | Mute buzzer | Press the button to mute the buzzer temporarily, once new warning or fault is active, buzzer will work again |

## 4.2 LCD description

The LCD backlight automatically dims after 10 minutes of inactivity. Press any button to restore the screen.

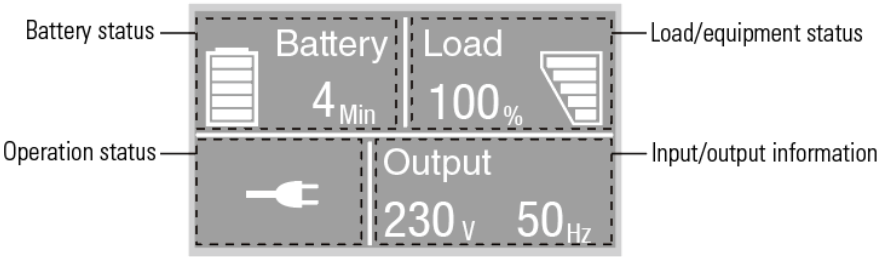

| Operation status | Cause | Description |
|---|---|---|
|  | Standby mode | The UPS is Off without output. |
|  | Online mode | The UPS is operating normally and protecting the equipment. |
| <br>1 beep every 4 seconds | Battery mode | A utility failure has occurred, and the UPS is powering the equipment with battery.<br>Prepare your equipment for shutdown. |
| <br>1 beep every 1 seconds | Battery mode with battery low | This warning is approximate, and the actual time to shutdown may vary significantly. |
|  | High Efficiency mode | Once the mains are loss or abnormal, the UPS would transfer to Line mode or Battery mode and the load is supplied continuously. |
|  | Converter mode | The UPS would free run with fixed output frequency (50Hz or 60Hz).<br>The load should be derating to 60% in converter mode. |
|  | Bypass mode | Overload or fault has occurred, or a command has been received, and the UPS is in Bypass mode. |
|  | Battery test | UPS is executing a battery test |
|  | Battery fail | The UPS detects bad battery or battery disconnected |
|  | Overload | Some unnecessary loads should be cut off to reduce the load. |
|  | Fault mode | Some fatal problems happened. |

## 4.3 Display functions

When starting the UPS, the display is in the default UPS status summary screen.

| Main menu | Submenu | Display information or Menu function |
|---|---|---|
| UPS status | | UPS mode, IoT status, date/time, battery status and current alarms |
| Event log | | Displays the events and faults stored |
| Measurements | Load | Load information |
| | In /Out | Input/Output voltage and frequency |
| | Battery | Battery information |
| | DC Bus | DC Bus voltage |
| | Ambient Temperature | Temperature |
| | BMS Information [1] | Internal battery and EBM information |
| Control | Go to Bypass | Transfers the UPS on Bypass mode |
| | Load segment | Load segment on/off |
| | Start battery test | Starts a manual battery test |
| | Reset fault state | Clear active fault |
| | BMS Auto Setup [2] | Number of re-identified BMS |
| | Reset event list | Clear events and faults |
| | Reset com card | Reset com card inside UPS |
| | Restore factory settings | Restore to default factory settings |
| Settings | | Refer to chapter 4.4 User settings |
| Identification | UPS Information | Product name, Serial number, firmware version |
| | IOT Information | IP/MAC address |

【1】BMS information include voltage, current, SOC, SOH, battery capacity, BMS Firmware version of all batteries.

【2】BMS auto setup, UPS will automatically identify the connected lithium battery only when it is powered on , and keep communicating with them. If the number of BMS changes after UPS is powered on, you need to select the "BMS auto setup" option under the LCD control menu to re-identify the number of BMS, otherwise it will affect the estimate of the actual discharge time.

## 4.4 User settings

| Submenu | Available settings | Default settings |
|---|---|---|
| language | English, Italiano, Français, Deutsch, Español, Русский, Polski, 简体中文 | English |
| User password | [enabled, ****], [disabled] | Enabled（4732） |
| Audible alarms | [enabled], [disabled] | enabled |
| Output voltage | [200V], [208V], [220V], [230V], [240V] | [230V]<br>[240V] for AU |
| Output frequency | [autosensing], [converter 50Hz, 60Hz] | autosensing |
| High efficiency mode | [disabled], [enabled] | disabled |
| Auto bypass | [disabled], [enabled] | disabled |
| Load segment | [Auto start delay], [Auto shutdown delay] | Load segment delay time |
| Start/Auto restart/Start from bypass | [disabled], [enabled] | Cold start/Auto restart: enabled<br>Start from bypass: disabled |
| Site wiring fault | [enabled], [disabled] | disabled |
| Overload pre-alarm | [50%~105%] | 105% |
| Dry in signal | [Disabled], [Remote on], [Remote off], [Forced bypass] | |
| Dry out signal | [load powered], [on bat], [Low bat], [bat open], [bypass], [ups ok] | bypass |
| Ambient temperature alarm | [enabled], [disabled] | enabled |
| Battery remaining time | [enabled], [disabled] | enabled |
| Date and time | dd/mm/yyyy hh:mm | 01/01/2020 00:00 |
| LCD contrast | [-10 ~ +10] | [0] |
| Modbus TCP | [enabled], [disabled] | disabled |
| IoT | [enabled], [disabled] | disabled |

If the load type is a transformer type, it is recommended to enable the “start from bypass” function.
It is recommended that you change your password when using.

## 4.5 Starting the UPS with utility

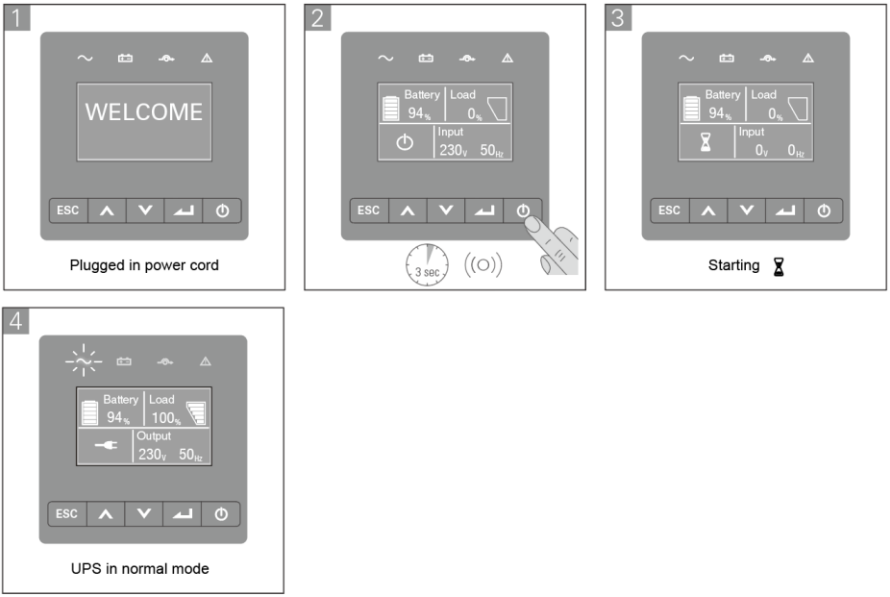

## 4.6 Starting the UPS on Battery

Before using this feature, the UPS must have been powered by utility power with output enabled at least once.

Battery start can be disabled. Refer to the Chapter *4.4 User setting*

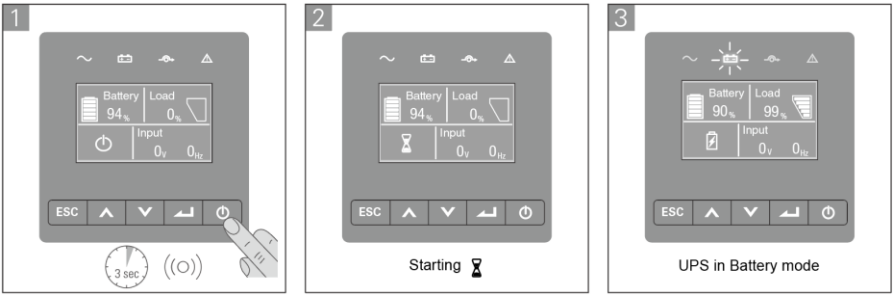


## 4.7 UPS Shutdown

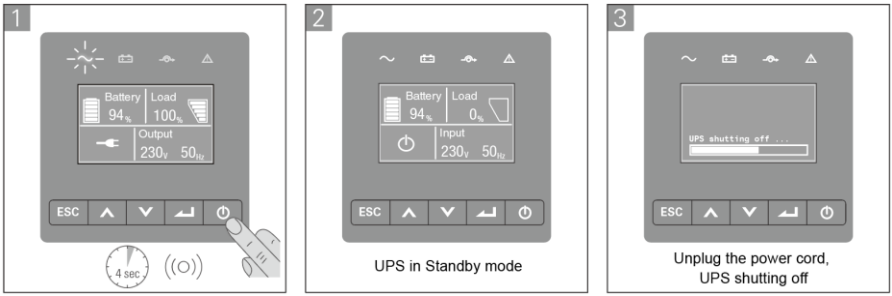

# 5 Communication

## 5.1 RS232 and USB

1. Communication cable to the serial or USB port on the computer.
2. Connect the other end of the communication cable to the RS232 or USB communication port on the UPS.

## 5.2 UPS remote control functions

- **Remote Power Off (RPO）**

When RPO is activated, UPS will cut off output immediately, and continues to alarm.

| RPO | Comments |
|---|---|
| Connector type | 16 AWG Maximum wires |
| External breaker specification | 60 V DC/30 V AC 20 mA max |

- **Dry in**

Dry in function can be configured (see Settings > Dry in)

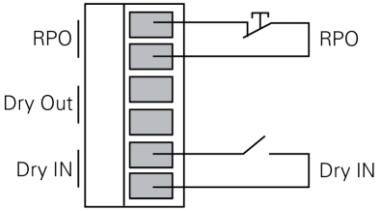


| Dry in | Comments |
|---|---|
| Connector type | 16 AWG Maximum wires |
| External breaker specification | 60 V DC/30 V AC 20 mA max |

- **Dry out**

Dry out is the relay out, dry out function can be configured (see Settings > Dry out)

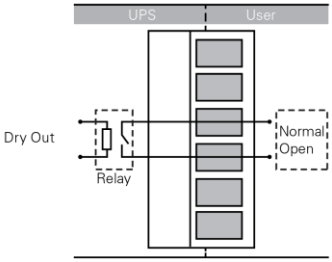


| Dry out | Comments |
|---|---|
| Connector type | 16 AWG Maximum wires |
| Inner Relay specification | 24Vdc/1A |

## 5.3 IoT

Built-in ethernet port and WLAN (optional accessary) port enable market-leading and easy-to-use IoT solutions for:

- ION UPS IoT mobile app which allows you to remote monitor UPS(s) and keep informed about critical UPS event always.
- Remote report UPS faults and status (contact with your service for detail) from APP or registered APP account (Email address)
- Automatic UPS and battery warranty alert from APP or registered APP account (Email address)

### IoT Connection

- **Wired connection**

1. Connect UPS and router or switch with network cable

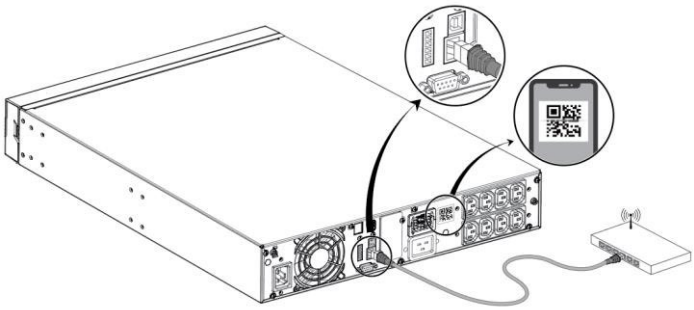

Please use CAT6 shielded network cable.

The Position of QR code on the UPS is for reference, subject to the actual UPS label.

Make sure your IT settings can access the public network and Microsoft Azure Cloud

2. Enable the IoT function in LCD (see Settings -> IoT)
3. Search the “ION UPS IoT” from Google Play store or Apple APP store, downloading and installing.
4. Open the app, register an account, log in, follow the instructions of the app.

5. Tap ⊕ on the upper right corner, scan the SN barcode on UPS label to add device.

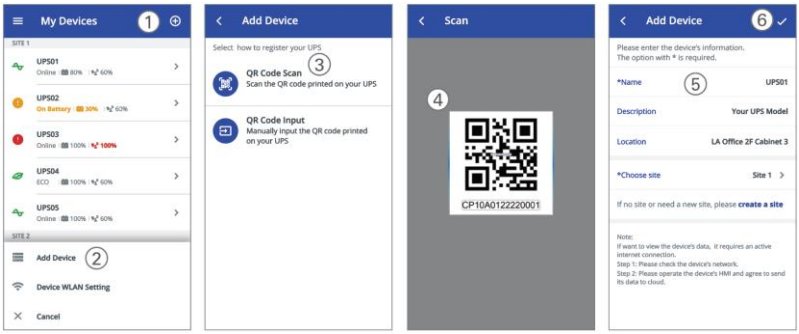


For more detail information and Q&A about the IoT and APP, please refer to the HELP menu in the app.

- **Wireless connection**
  The wireless module is optional, please contact your local distributor for details

## 5.4 Modbus TCP

Built-in ethernet port offers Modbus TCP feature to facilitate remote monitoring of the UPS into your own software. Contact with your service for protocol details.

## 5.5 Intelligent Card (Optional)

Intelligent Card allow the UPS to communicate with different types of devices in variety of networking environments. The Innova Unity IoT series could use the following connectivity cards, please contact your local distributor for details

- **NMC Card** - Ideal monitoring solution enables user to monitor and control the status of UPS on web browser via internet
- **CMC card** - provides connection to Modbus protocol with standard RS485 signal.
- **AS400 G2 card** - Provides voltage-free dry-contact signals for programmable controller and management system
- **EMP -** Supports temperature and humidity sensors for remote environment monitoring, should work with NMC Card

## 5.6 UPS Management Software

### 5.6.1 WinPower

WinPower provides user-friendly interface to monitor and control your UPS. This unique software provides safely auto shutdown for multi-computer systems while power failure. With this software, users can monitor and control any UPS on the same LAN no matter how far from the UPS.

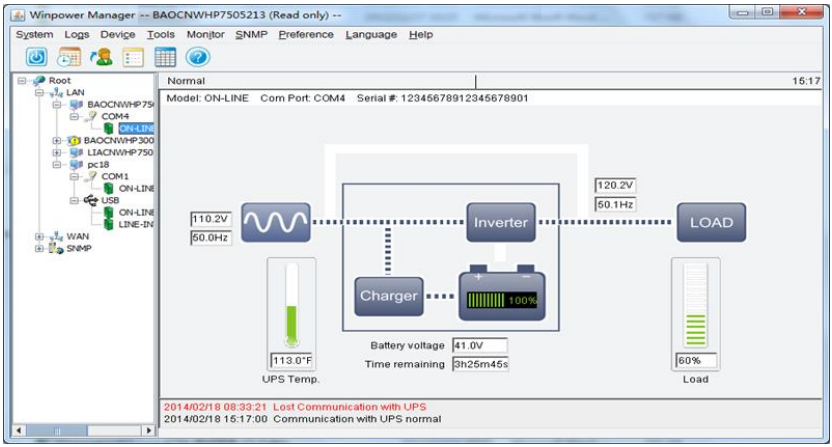


## Installation procedure:

1. Go to the website:http://www.ups-software-download.com
2. Choose the operation system you need and follow the instruction described on the website to download the software.
3. When downloading all required files from the internet, enter the serial No: **511C1-01220-0100-478DF2A** to install the software.

When you finish installation, restart your computer, the WinPower software will appear as a green plug icon located in the system tray, near the clock.

### 5.6.2 ION UPS IoT APP

ION UPS IoT is a mobile app which allows you to centralized monitoring UPS(s) connected to cloud. Please download it from Google Play store or Apple APP store. Please refer to the chapter 5.3 for IoT connection.

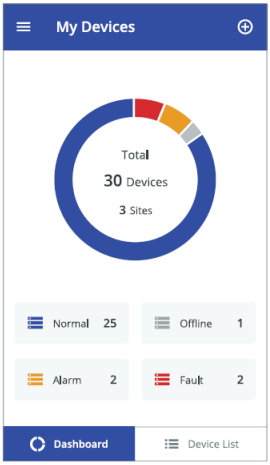


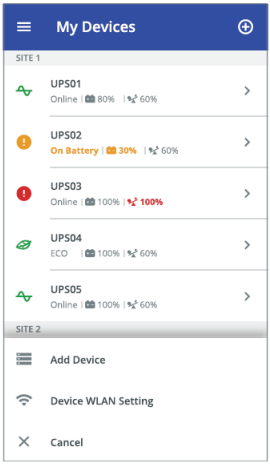


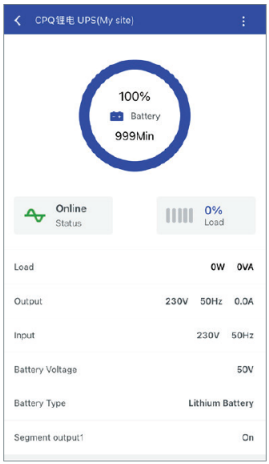

# 6 UPS maintenance

## 6.1 Equipment care

For the best preventive maintenance, keep the area around the equipment clean and dust free. If the atmosphere is very dusty, clean the outside of the system with a vacuum cleaner.

For full battery life, keep the equipment at an ambient temperature of 25°C (77°F).

The batteries are rated for 8 years service life. The length of service life varies, depending on the frequency of usage and ambient temperature. Batteries used beyond expected service life will often have severely reduced runtimes.

## 6.2 Transporting the UPS

Please transport the UPS only in the original packaging. If the UPS requires any type of transportation, verify that the UPS is disconnected and turned off.

## 6.3 Storing the equipment

If you store the equipment for a long period, recharge the battery every 6 months by connecting the UPS to utility power. However, recommends that the batteries charge for 48 hours after long-term storage. Check the battery recharge date on the shipping carton label. If the date has passed and the batteries were never recharged, do not use them. Contact your service representative.

## 6.4 Replacing batteries

DO NOT DISCONNECT the batteries while the UPS is in Battery mode.

Consider all warnings, cautions, and notes before replacing batteries.

- Servicing should be performed by qualified service personnel with knowledgeable of batteries and required precautions. Keep unauthorized personnel away from batteries.

- **Replacing the internal battery(For RT)**

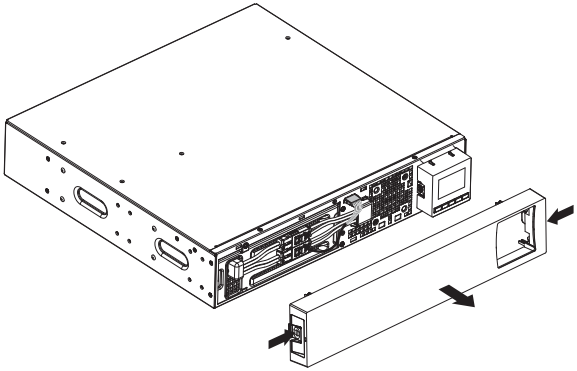

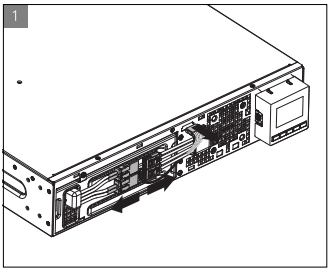


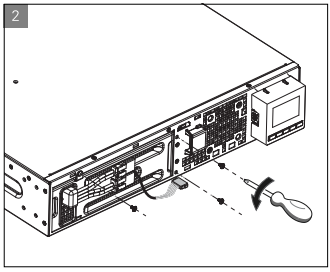


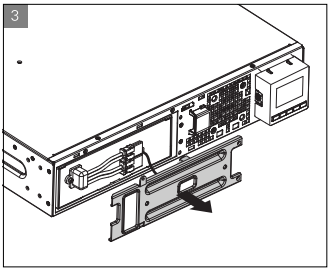


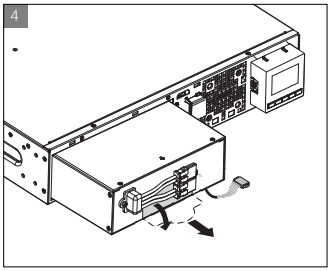


1. Put the new battery pack into the UPS.
2. Screw back the metal protection covers and the front panel.
3. Testing new batteries.

Verify that the replacement batteries have the same rating and brand as the batteries being replaced.

## 6.5 Recycle

Contact your local recycling or hazardous waste center for information on proper disposal of the used equipment.



Do not dispose of the batteries in the fire. Which may cause battery explosion. The batteries must be rightly disposed according to local regulation.

Do not open or destroy the batteries. Escaping electrolyte can cause injury to the skin and eyes. It may be toxic.



This symbol indicates that you should not discard the UPS or the UPS batteries in the trash. This product contains sealed, Lithium-Ion batteries and must be disposed of properly. For more information, contact your local recycling/reuse or hazardous waste center.



This symbol indicates that you should not discard waste electrical or electronic equipment (WEEE) in the trash. For proper disposal, contact your local recycling/reuse or hazardous waste center.

# 7 Troubleshooting

Typical alarms and faults:

To check the UPS status and Event log:

1. Press any button on the front panel display to activate the menu options.
2. Press the button to select Event log.
3. Scroll through the listed events and faults.

The following table describes typical conditions.

| Conditions | Possible cause | Action |
|---|---|---|
| Battery mode<br><br>LED is On.<br>1 beep every 4 seconds. | A utility failure has occurred, and the UPS is in Battery mode. | The UPS is powering the equipment with battery power. Prepare your equipment for shutdown. |
| Battery low<br><br>LED is On.<br>1 beep every second. | The UPS is in Battery mode and the battery is running low. | This warning is approximate, and the actual time to shutdown may vary significantly. Depending on the UPS load and the number of EBMs(Extended Battery Modules), an alarm may occur before the battery capacity reaches 20 percent. |
| No battery<br><br>LED is On.<br>Beep continuous. | The batteries are disconnected. | Make sure all batteries are properly connected, if the problem persists, contact your service representative. |
| Battery fault<br><br>LED is On.<br>Beep continuous. | The battery test is failed due to bad or disconnected batteries. | Make sure all batteries are properly connected, if the problem persists, contact your service representative. |
| The UPS does not provide the expected backup time. | The batteries need charging or service. | Apply utility power for 48 hours to charge the batteries. If the condition persists, contact your service representative. |

| Conditions | Possible cause | Action |
|---|---|---|
| Bypass mode<br><br>LED is on. | An overload or a fault has occurred, or a command has been received and the UPS is in Bypass mode. | Equipment is powered but not protected by the UPS. Check for one of the following alarms: overtemperature, overload, UPS failure or auto bypass setting. |
| Power overload<br><br>LED is On. | Power requirements exceed the UPS capacity (greater than 100% of nominal; | Remove some of the equipment from the UPS. The alarm resets when the condition becomes inactive. |
| over temperature warning<br><br>LED is On.<br>1 beep every second. | The UPS internal temperature is too high. At the warning level, the UPS generates the alarm but remains in the current operating state. | If the UPS is switched to bypass mode, the UPS will resume normal operation when the temperature is 5°C below the alarm temperature. If the fault persists, turn off the UPS. clear the vents and remove all heat sources. Allow the UPS to cool. Ensure that airflow around the UPS is not restricted. restart the UPS. if the problem persists, contact a service representative. |
| The UPS does not start. | The input source is not connected correctly. | Check the input connections. |
| | The Remote Power Off (RPO) switch is active or the RPO connector is missing. | If the UPS Status menu displays the "Remote Power Off" notice, inactivate the RPO input. |
| Emergency power off | RPO is active | 1.Check the RPO connector status<br>2.Reset the RPO fault through LCD. Main menu – Control - Reset fault state. |
| Fan fault | Fan abnormal | Check if the fan is running normally |
| Site fault | Phase and neutral conductor at input of UPS system are reversed | Site Fault detection disabled by default. It can still be enabled / disabled from the LCD settings menu.<br>Reconnect all input wires. |
| Over temperature fault | Over temperature is too high, UPS goes to bypass or stopped. | Check the ventilation of the UPS and check the ambient temperature. |
| Output short circuit | Output short circuit occurred | Check the output of UPS and loads, make sure the short circuit is removed before turning on again. |
| APP cannot connect to | IoT is disabled | Enable IoT function in LCD |

| Conditions | Possible cause | Action |
|---|---|---|
| UPS | Your IT settings may block UPS get cloud connected (NTP, Proxy, etc.) | please refer to ION UPS IoT app help file |

# 8 Specifications

## 8.1 UPS Block Diagram

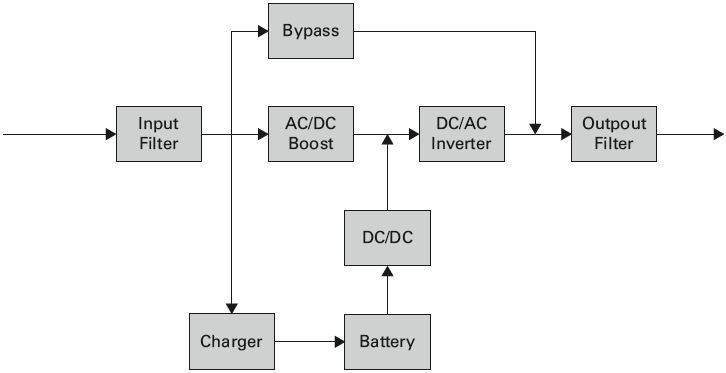


## 8.2 UPS Specification

| Model name | | 1K | 1.5K | 2K | 3K |
|---|---|---|---|---|---|
| Power rating | VA/Watt | 1000VA/1000W | 1500VA/1500W | 2000VA/2000W | 3000VA/3000W |
| Efficiency | Line mode | up to 91.3% | up to 92.1% | up to 93.8% | up to 94% |
| | ECO mode | up to 97.1% | up to 98.2% | up to 97.8% | up to 98.4% |
| Input performance | Voltage range | 160-300V 100% load, 110-160V derating to 50% load linearly | | | |
| | Rated frequency | 50Hz/60Hz | | | |
| | Frequency range | 40Hz-70Hz (45Hz-55Hz, 54Hz-66Hz @ load>60%) | | | |
| | PF | >0.99 | | | |
| | THDI | <5.5% | | <5% | <5% |
| Input connection | Socket (RT) | 1x IEC C14 | | 1x IEC C20 | |
| Output performance | Rated voltage | 200/208/220/230/240 VAC (derating 10% at 208V, derating 20% at 200V) | | | |
| | Rated frequency | 50Hz/60Hz | | | |
| | Maximum PF | PF = 1 | | | |
| | Voltage accuracy | ±1% | | | |
| | THDV | <1% linear load; <4% nonlinear load | | | |
| | Transfer time | 0ms@line <-> battery; 4ms @ line <-> bypass; 10ms @ ECO <->Inverter | | | |
| | Crest Ratio | Max 3:1 | | | |

| Model name | | 1K | 1.5K | 2K | 3K |
|---|---|---|---|---|---|
| | Overload | 100%<load≤105% continuous.<br>105%< load ≤125% for 5 minutes<br>125<load≤150% for 30 seconds.<br>>150% for 500ms. | | | |
| Output connection | Socket | 1 main outlet group (with 4 x IEC C13)<br>1 programmable outlet group (with 4 x IEC C13) | | | 1 main outlet group (with 1 x IEC C19 + 4 x IEC C13)<br>1 programmable outlet group (with 4 x IEC C13) |
| | Load segment control | 1 programmable load segment control | | | |
| Short-circuit current (RMS) /protect time | Bypass mode | 550A/2.8ms | | 699A/7ms | 699A/7ms |
| | Normal/Battery mode | 20A/100ms | | 36A/100ms | 54A/100ms |
| Battery | Voltage | 48VDC | | 76.8VDC | 76.8VDC |
| | Capacity (AH) | 9Ah | | 9Ah | 9Ah |
| | Material | lithium iron phosphate (Li-FePO4) | | | |
| Maximum EBM quantity | | 6 | | | |
| EBM auto detection | | Yes | | | |
| Battery Hot swappable | | Yes | | | |
| Charger | Charging method | BMS | | | |
| | Charging current | 1.5A | | 1.5A | 1.5A |
| | Recharging time | 3.6h to 90% | | 4.6h to 90% | 4.6h to 90% |
| Other mode | CVCF | Yes (derating to 60% load) | | | |
| HMI | Display | Dot matrix LCD (optional segment LCD) | | | |
| | Language | Multi-Language | | | |
| | USB | USB 2.0 with HID power device | | | |
| | RS232 | Yes (DB9) | | | |
| | Dry in/out | 1 programmable dry in; 1 programmable dry out | | | |
| | RPO | Yes | | | |
| | Intelligent slot | Yes (for long card) | | | |
| | Network card | Optional, NMC long card | | | |
| | Modbus card | Optional, CMC Long Card | | | |
| | Dry contactor card | Optional, AS400 Long Card | | | |
| | Wireless module | Optional | | | |
| | IOT Ethernet port | RJ45 | | | |
| | Monitor software | Winpower, ION UPS IoT APP | | | |
| Physical performance | Dimension (W*D*H) mm | 438*445*85.5(2U) | | 438*600*85.5(2U) | |
| | IP protection level | IP20 | | | |
| | Plug solid | Optional | | | |
| | Wheel | No | | | |
| Environment | Operating temperature | 0-40°C | | | |

| Model name | | 1K | 1.5K | 2K | 3K |
|---|---|---|---|---|---|
| | storage temp | 0 to 40°C (32 to 104°F) with batteries<br>-25 to 55°C (5 to 140°F) without batteries | | | |
| | Relative Humidity | 0-95% | | | |
| | Operating Altitude | 0~3000m（the load derating 1 % every up 100m @1000~3000m） | | | |
| | Acoustic Noise | <45dB at front 1m | | <50dB at front 1m | |
| Certification | UPS | CE/CB,IEC62040, UN38.3 | | | |
| | EBM | IEC62619,UN38.3,UL1973 compliant | | | |
| EMI | Conduction /Radiation | C2 | | | |
| EMS | ESD | IEC/EN 61000-4-2 | | | |
| | RS | IEC/EN 61000-4-3 | | | |
| | EFT | IEC/EN 61000-4-4 | | | |
| | Surge | IEC/EN 61000-4-5 | | | |
| Accessory | Input power cable | Yes | | | |
| | Output power cable | Yes | | | |
| | EBM cable | Yes (in EBM) | | | |
| | USB cable | Yes | | | |
| | RS232 cable | Optional | | | |
| | Rail kit | Optional | | | |
| | Tower Feet | Yes | | | |
| | Rack ear | Yes | | | |
| | Manual (English) | Yes | | | |

614-40197EG1-02